# Elderhorst Bells, Inc.

## *I261-ARBOR, CLOCK MOVEMENT*

*(SUITABLE FOR CLOCKS TO 60" DIAMETER)*

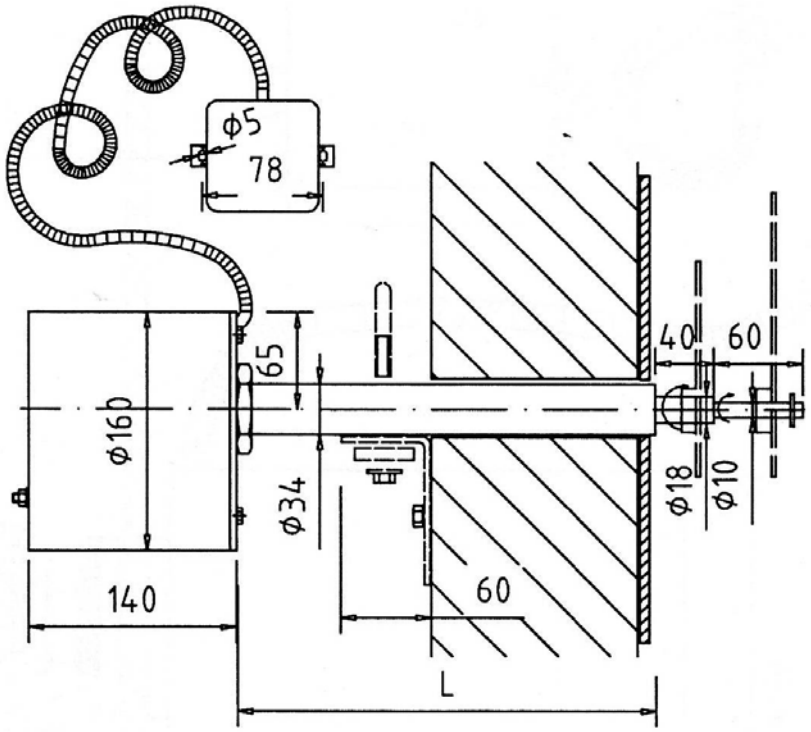


Fig. 15

Dimension "L" is available in a number of lengths to fit most applications – contact Elderhorst Bells for information. All dimensions shown are in mm.

One I261 Arbor type clock drive movement for each clock will be provided These clock movements are built in a totally maintenance free design. The movements are driven by a 120 Volt, 60 hz, high-torque motor which is activated by the impulse type clock controller at one minute intervals.

This movement is also available in a 230V/50HZ configuration

875 Gravel Pike • Palm, PA 18070 • (215) 679-3264 • FAX (215) 679-3692 • www.elderhorstbells.com